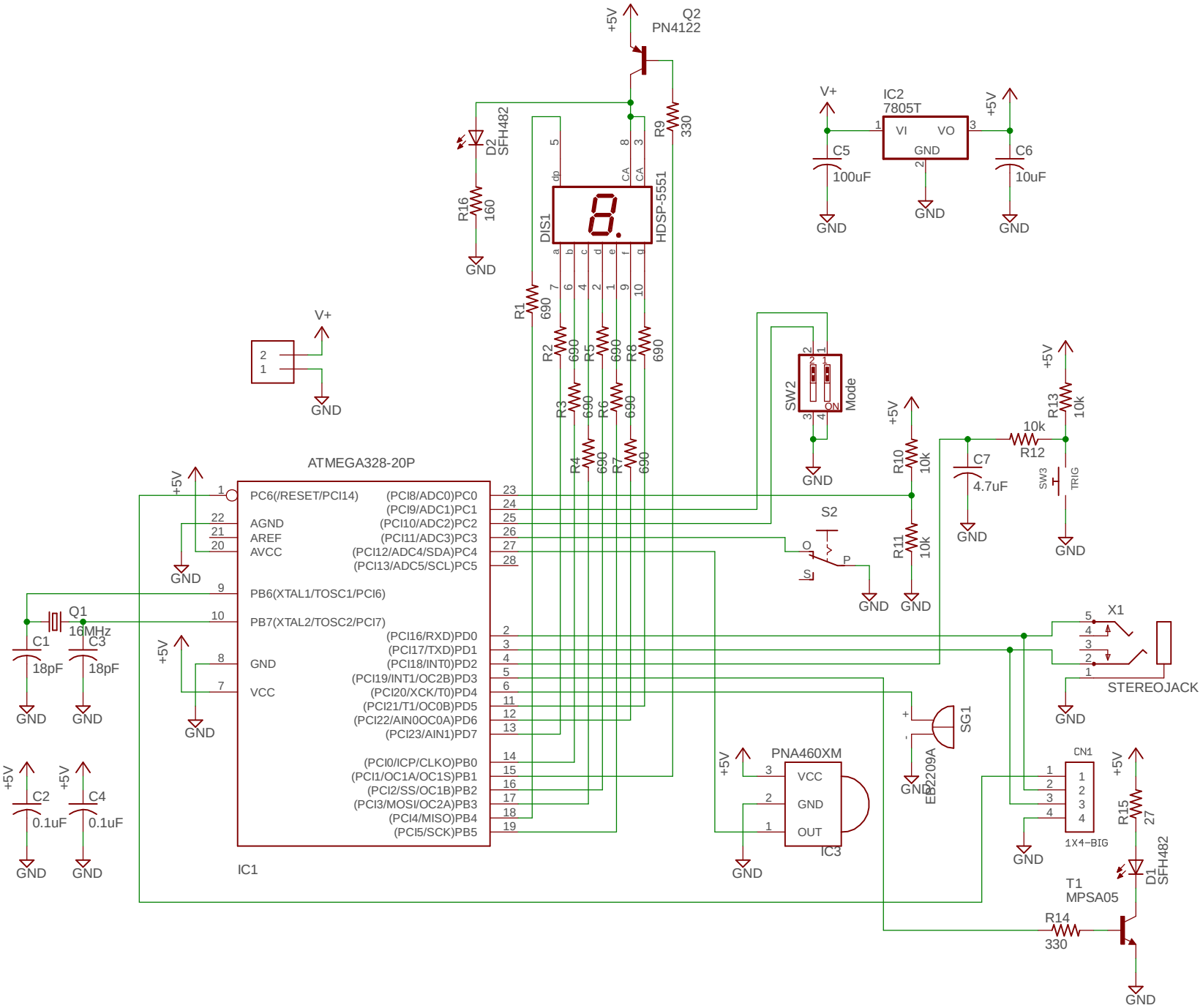
Q2
PN4122
+5V
D2
SFH482
R16
160
GND
R9
330
DIS1
HDSP-5551
R1
690
R2
690
R3
690
R4
690
R5
690
R6
690
R7
690
R8
690
V+
IC2
7805T
VI
VO
GND
C5
100uF
C6
10uF
SW2
Mode
ON
R10
10k
R11
10k
R12
10k
R13
10k
C7
4.7uF
SW3
TRIG
S2
O
P
S
ATMEGA328-20P
PC6(/RESET/PCI14)
AGND
AREF
AVCC
PB6(XTAL1/TOSC1/PCI6)
PB7(XTAL2/TOSC2/PCI7)
GND
VCC
(PCI8/ADC0)PC0
(PCI9/ADC1)PC1
(PCI10/ADC2)PC2
(PCI11/ADC3)PC3
(PCI12/ADC4/SDA)PC4
(PCI13/ADC5/SCL)PC5
(PCI16/RXD)PD0
(PCI17/TXD)PD1
(PCI18/INT0)PD2
(PCI19/INT1/OC2B)PD3
(PCI20/XCK/T0)PD4
(PCI21/T1/OC0B)PD5
(PCI22/AIN0OC0A)PD6
(PCI23/AIN1)PD7
(PCI0/ICP/CLKO)PB0
(PCI1/OC1A/OC1S)PB1
(PCI2/SS/OC1B)PB2
(PCI3/MOSI/OC2A)PB3
(PCI4/MISO)PB4
(PCI5/SCK)PB5
IC1
Q1
16MHz
C1
18pF
C3
18pF
C2
0.1uF
C4
0.1uF
PNA460XM
VCC
GND
OUT
IC3
SG1
EB2209A
X1
STEREOJACK
CN1
1X4-BIG
R15
27
D1
SFH482
T1
MPSA05
R14
330